Development of Battery Parallel Operation for Improving Battery Service Life and Flexibility in Electric Vehicles

Yow-Chyi Liu[1], En-Chih Chang[2], and Chin-Jui Liu[1]
[1]Department of Electrical Engineering, Kao Yuan University, Kaohsiung City, Taiwan, R.O.C.
[2]Department of Electrical Engineering, I-Shou University, Kaohsiung City, Taiwan, R.O.C.
Email: liuyc@cc.kyu.edu.tw, enchihchang@isu.edu.tw, ttttttt906@yahoo.com.tw

***Abstract*—This paper is a novel method for connecting in parallel old batteries, new batteries, batteries of various types, batteries with various voltages, batteries with different capacities and batteries with various States of Charge (SOC) to improve the flexibility of their use and their service life. The percentage load share for each battery is determined by its SOC, voltage and actual capacity. When the capacity of the battery in an electric vehicle is degraded so that it cannot function over the originally specified number of kilometers, the battery can be connected in parallel to another battery with a smaller capacity to extend its service life without the need to replace it. Experimental results reveal that the life of batteries can be improved by more than 50% in this way.**

***Index Terms*—states of charge, available capacity, electric vehicles, bi-directional DC/DC converter, battery service life**

I. Introduction

Battery cost and battery capacity are key factors determining whether electric vehicles would be used widely. Batteries are currently more expensive than fuel, and limited mileage severely restricts electric vehicle usage. These problems must be resolved for practical applications. The available capacity of a battery is reduced as the cycle number and the depth of discharge increase. When the available capacity of a battery is reduced to 80% of its rated capacity, the maintainer will generally suggest that the battery be replaced. Even battery with a low capacity can still function. This paper is a novel method for battery parallel operation for improving battery service life and flexibility in electric vehicles

Battery parallel operation is able to increase the battery capacity and application flexibility. However, even if we connect the same type of batteries in parallel, it may still generate circulating current due to different internal impedance of the cells [1]. Therefore, there is a need to overcome such circulating current problem [2], [3]. There are literatures indicating the exploration of intermittent current discharge method using parallel-connected batteries to supply power. The research findings have shown the intermittent current discharge method is able to release more capacity than constant current [4]-[6].

DC power supplies in parallel techniques can be classified into voltage drop method and active current-sharing method two categories [6], [7]. Voltage drop method is accomplished by the circuit characteristics of the converter itself. The output voltage or current is adjusted to reach a balanced distribution of the current. Because its parallel construction is simple and there is no communication between the power converters, the effect is poorly balanced [8]-[10]. Active current-sharing method has information of other power converters as a basis for control of the current balance, therefore it has excellent effects, such as produced by Texas Instruments UCC39002, UC3902 and UC3907.

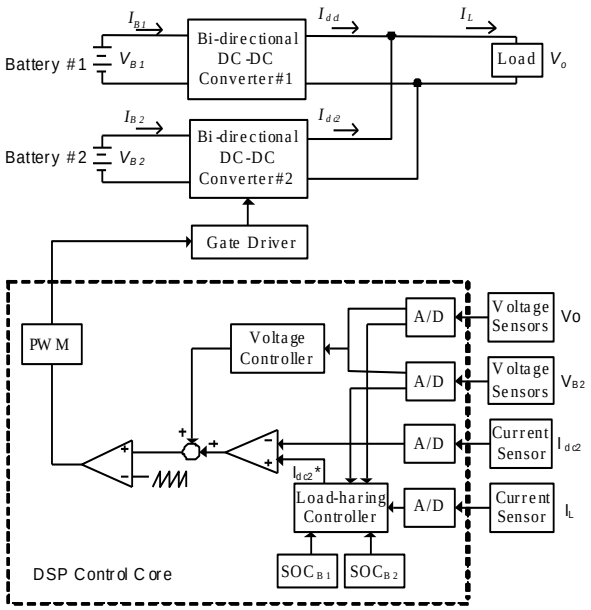

Figure 1. The proposed parallel system.

II. Battery Parallel Operation

A. Proposed Parallel Systems

Fig. 1 displays the proposed parallel system. The circuit includes a bi-directional DC-DC converter, a DSP core controller, current sensors, voltage sensors and an

Manuscript received February 17, 2015; September 22, 2015.

doi: 10.18178/ijoee.3.4.266-270

SOC estimator. Battery #1 is the original battery, and battery #2 is the battery with a lower capacity. The percentage load share for each battery is determined by its SOC, voltage, actual capacity and efficiency. This can be specified as (1)-(2). The developed method adjusts the load share according to the features of each battery, including its maximum charge/discharge current, its charge/discharge cut-off voltage and the effect of low-current discharge on the battery's available capacity, to optimize the load share and the overall performance of the batteries that are connected in parallel. A DSP core controls bi-directional DC-DC converters to achieve the required load share.

$$P_{B2} = \frac{SOC_{B2} \times Q_{B2} \times V_{B2} \times \eta_{C2}}{SOC_{B1} \times Q_{B1} \times V_{B1} \times \eta_{C1} + SOC_{B1} \times Q_{B2} \times V_{B2} \times \eta_{C2}} \times P_L \quad (1)$$

$$P_{B1} = P_L - P_{B2} \quad (2)$$

where P_{B1} represents the output power of battery #1, SOC_{B1} represents the states of charge of battery #1, V_{B1} represents the output voltage of battery #1, η_{C1} represents the efficiency of battery #1 and Q_{B1} represents the actual capacity of battery #1. P_{B2} represents the output power of battery #2, SOC_{B2} represents the states of charge of battery #2, V_{B2} represents the output voltage of battery #2, η_{C2} represents the efficiency of battery #2 and Q_{B2} represents the actual capacity of battery #2. P_L represents load power.

B. Battery Capacity Estimation System

Fig. 2 displays the flow chart of the smart battery capacity estimation system, including calculus processes for the open circuit voltage method, coulometric measurement method, current effect, battery aging, temperature and charging efficiency [11].

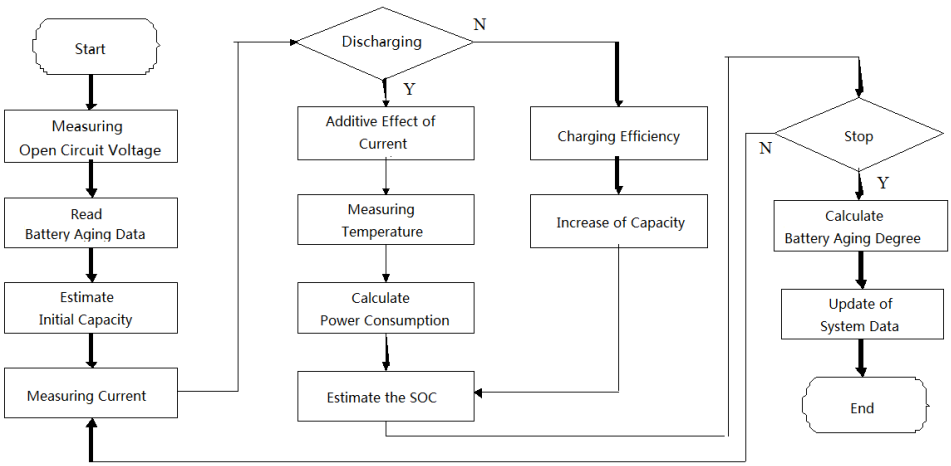

Figure 2. Flow chart of the battery capacity estimation system.

The SOC is modified by the additive effect of the current, battery temperature, and battery aging effect, as shown in (3).

$$SOC(t) = SOC(t_0) \pm \int_{t_0}^{t} f_1(I) \times f_2(T) \times f_3(\text{Cycle}) \times f_4(Efficiency) \times \frac{I_o(t)}{Q_B} dt \times 100\% \quad (3)$$

where $SOC(t)$ refers to the present residual power; $SOC(t_0)$, the initial capacity; $Q_B(t)$, the actual capacity; $I_o(t)$, the discharge current; $f_1(I)$, the current correction factor; $f_2(T)$, the temperature correction factor; $f_3(cycle)$, the battery aging correction factor; and $f_4(efficiency)$, the charging efficiency factor.

1) Open circuit voltage method

While the battery is discharging, its terminal voltage drops following the release of electric power. The SOC of the battery can be determined by measuring the battery open circuit voltage. Despite its high accuracy, the open circuit voltage measurement method can only estimate the initial capacity accurately but can not provide an accurate battery capacity during its discharging process. Therefore, once charging or discharging is completed, the battery requires a rest period. For a lithium battery, the rest period lasts more than 1.5 hours as the electrolyte concentration required time to stabilize before the internal capacity of a battery can respond to the output voltage of a battery.

2) Coulometric measuring method

Coulometric measurement is also referred to as the ampere-hour method, and is currently considered as a highly accurate method. According to the energy conservation theorem, the battery input energy equals the battery output energy. Battery released capacity is the multiplication of output current and discharge time. Importantly, although the coulometric measurement method allows us to estimate the battery capacity accurately, it unfortunately generates a large accumulative error if used for a long period of time. Therefore, this paper adopts both the open circuit voltage measurement method and coulometric measurement method coordinately. Importantly, the both methods, as well as discharge current, battery temperature, battery aging and charging efficiency are incorporated into the corrections of battery capacity estimation to develop a highly accurate lithium-ion battery capacity estimation method.

3) Additive effect of current

As the available battery capacity is subject to the load current size, the releasable capacity varies under different discharge currents. For instance, while a larger discharge current implies a smaller battery released capacity, a smaller discharge current implies a larger battery released capacity.

4) Battery aging effect

The number of battery cycles, discharge depth, discharge current size and temperature affect the battery capacity.

5) Temperature

A rising ambient temperature completes the electrochemical reaction of a battery. Therefore, a smaller battery internal resistance leads to a higher released capacity. In contrast, the battery capacity diminishes.

C. Bi-Directional dc-dc Converter

A bi-directional dc-dc converter shown in Fig. 3 is employed [3]. The difference between a bi-directional converter and a general power converter is there is no fixed output and input terminal in its circuit operation but it needs to follow the power flow direction to define its output and input positions. The digital signal processor dsPIC30F4011 are used as the control core. The bi-directional dc-dc converter can be divided into two operation modes. The first type is the buck mode where the energy is delivered from the high-voltage side V_{bus} to the low-voltage side of the battery. Here, the bi-directional converter serves as a charger. The second type is the boost mode where the output voltage from the lead-acid battery is raised to a required voltage for the load, and the energy is delivered from the low-voltage side of the battery to the high-voltage side V_{bus} to supply power to the load.

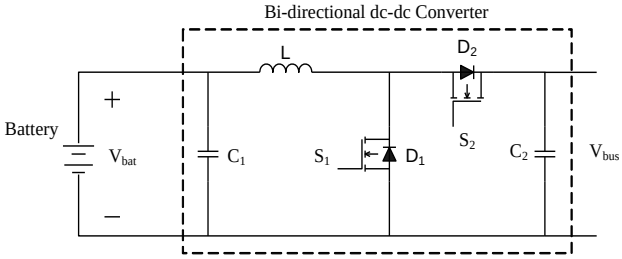

Figure 3. A bi-directional dc-dc converter.

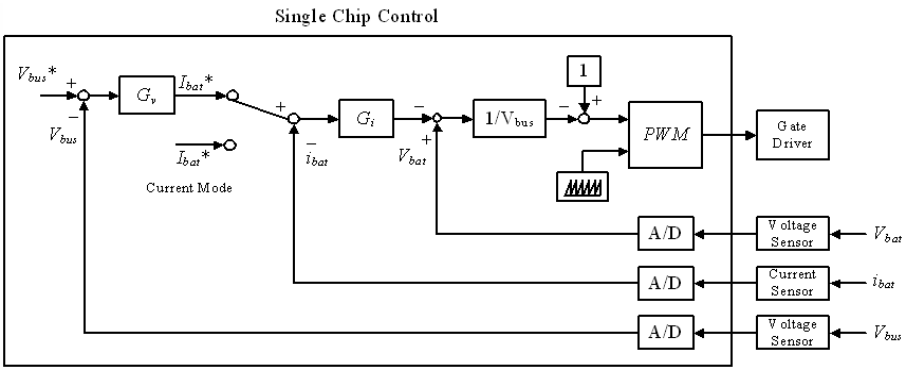

Figure 4. Block diagram of bi-directional dc-dc convert.

When bi-directional dc-dc converter operates in boost mode, the energy saved in the battery can be provided for load at high voltage side. In order to adjust high voltage side V_{bus} by controlling the discharge current of the battery. Take voltage loop as outer loop in order to adjust the output voltage to achieve voltage regulation effect as well as take current loop as inner loop to speed up transient response, to improve system stability and to provide over-current protection.

The discharge current command of battery, I_{bat}* could be derived from voltage regulation controller G_v via the errors between voltage command V_{bus}* and actual value V_{bus}. I_{bat}* can be specified as (4).

$$I_{bat}^* = G_v \times \left(V_{bus}^* - V_{bus}\right) \tag{4}$$

$$G_v = k_P + \frac{k_i}{s} \tag{5}$$

Equation (5) shows the voltage regulation controller G_v, in which k_p and k_i is for the proportion of voltage regulation controller and integral control gain, respectively.

If ignoring internal resistance of inductor L and consumption and voltage drop of power semiconductor switch and introducing current prediction method for current control to calculate the switch duty ratio via current error value, forcing actual discharge current I_{bat} close to discharge current command I_{bat}* under a switching time period. The conversion rate of inductor current for current prediction method is as (6).

$$\frac{d}{dt} I_{bat} \approx \frac{1}{T_S} \times e_i \tag{6}$$

where e_i represents current error (e_i=I_{bat}*-I_{bat}), T_s represents the switching time period.

Equation (7) shows the voltage of inductor L.

$$L\frac{d}{dt} I_{bat} = V_{bat} - \left(1 - d_{S1}\right) \times V_{bus} \tag{7}$$

Applying (6) to (7) will derive duty ratio of power semiconductor switch S_1, as shown in (8).

$$d_{S1} = 1 - \frac{1}{V_{bus}} \times \left(V_{bat} - \frac{L}{T_S} \times e_i\right) \tag{8}$$

A block diagram of bi-directional dc-dc converter in boost mode could be derived is shown as Fig. 4 according to (8). The bi-directional dc-dc converter of battery #1 adopts constant-voltage control while the bi-directional dc-dc converter of battery #2 adopts constant-current control.

III. Experimental Results

A. System Description

This experiment used a set of lead-acid battery GS 12V/4.5AH and a set of 24V lithium battery packs,

making a total of two sets of batteries operating in parallel. To simplify the circuit, the bi-directional dc-dc converter of the lithium-ion battery is omitted and thus the output terminal of the lithium battery is connected to a load as the voltage of the output terminal is 24V. The lead-acid battery is in commercial standards. The output voltage of each lead-acid battery is 12V and rises to 24V through the bi-directional dc-dc converter, and then connects with the lithium-ion battery in parallel for operation.

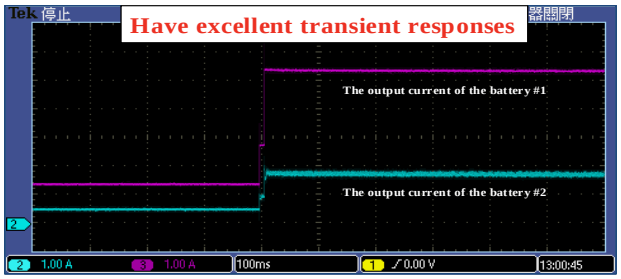

(a)

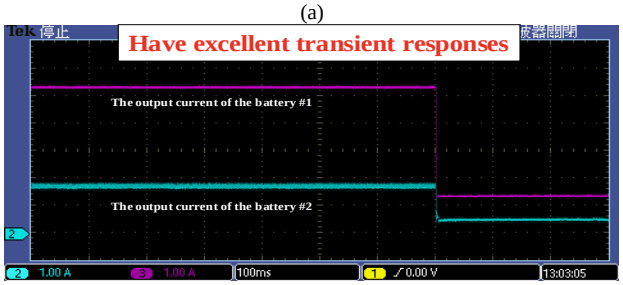

(b)

Figure 5. Transient responses for load changes (a) load changes from 30% to 100% (b) load changes from 100% to 30%.

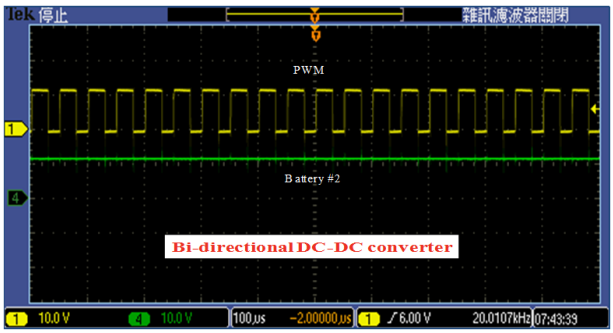

Figure 6. PWM and battery voltage waveforms

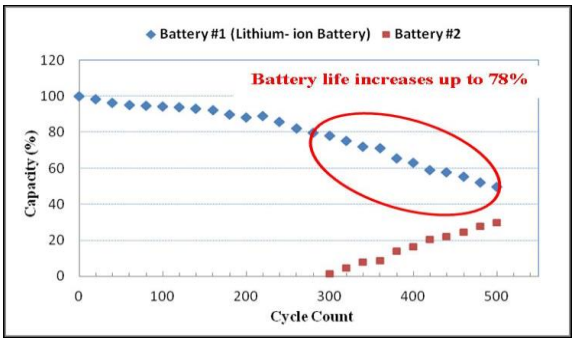

Figure 7. Performance of lithium battery.

The digital signal processor dsPIC30F4011 are used as the control core and the bi-directional DC-DC converter are driven by the A/D converter and PWM module inside the DSP. The design of the bi-directional dc-dc converter is as below: battery voltage 12V, output voltage 24V, battery output current 10A, switching frequency 20kHz, The parallel systems have excellent transient responses, are shown in Fig. 5. Fig. 6 shows waveform of PWM and battery voltage waveforms. The Lithium battery life is improved by up to 78%, is shown in Fig. 7. The Lead-acid battery life is improved by up to 61 %, is shown in Fig. 8.

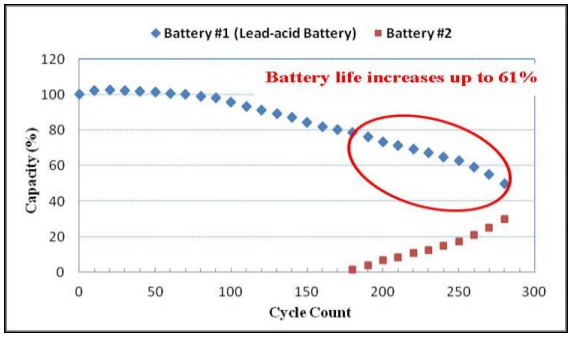

Figure 8. Performance of lead-acid battery.

IV. Summary

This paper is a novel method for connecting in parallel old batteries, new batteries, batteries of various types to improve the flexibility of their use and their service life. When the capacity of the battery in an electric vehicle is degraded so that it cannot function over the originally specified number of kilometers, the battery can be connected in parallel to another battery with a smaller capacity to extend its service life without the need to replace it. Experimental results reveal that the life of batteries can be improved by more than 50%.

References

[1] S. B. Han, M. L. Jeong, S. M. Hyung, and H. C. Gyu, "Load sharing improvement in parallel-operated lead acid batteries," in *Proc. IEEE ISIE'01*, Jun. 2001, vol. 2, pp. 1026-1031.

[2] L. Benini, D. Bruni, A. Macii, E. Macii, and M. Poncino, "Discharge current steering for battery lifetime optimization," *IEEE Trans. Computer*, vol. 52, no. 8, pp. 985-995, Aug. 2003.

[3] Y. C. Liu, "Improvement of available battery capacity in electric vehicles," *Journal of Power Electronics*, vol. 13, no. 3, pp. 497-506, May 2013.

[4] L. Benini, A. Macii, E. Macii, M. Poncino, and R. Scarsi, "Scheduling battery usage in mobile systems," *IEEE Trans. VLSI*, vol. 11, no. 6, pp. 1136-1143, Dec. 2003.

[5] C. S. Moo, K. S. Ng, and Y. C. Hsieh, "Parallel operation of battery power modules," *IEEE Trans. Energy Convers.*, vol. 23, no. 2, pp. 701-707, June 2008.

[6] S. Luo, Z. Ye, R. Lin, and F. C. Lee, "A classification and evaluation of parallel methods for power supply modules," in *Proc. CPES Seminar'98*, 1998, pp. 221-231.

[7] M. Jordan, "UC3907 load share IC simplifies parallel power supply design," Unitrode Application Note U129, 1991-1996.

[8] B. T. Irving and M. M. Jovanovic, "Analysis design and performance evaluation of droop current-sharing method," in *Proc. IEEE APEC'00*, 2000, pp. 235-241.

[9] C. S. Lin and C. L. Chen, "Single-Wire current-share paralleling of current-mode-controlled DC power supplies," *IEEE Trans. on Industrial Electronics*, pp. 780-786, 2000.

[10] B. T. Irving and M. M. Jovanovic, "Analysis design and performance evaluation of droop current-sharing method," in *Proc. IEEE APEC'00*, 2000, pp. 235-241.

[11] Y. C. Liu and S. B. Chang, "Design and implementation of a smart lithium-ion battery capacity estimation system for E-bike," *World Electric Vehicle Journal*, vol. 4, pp. 370-378, 2010.

Yow-Chyi Liu was born in Kaohsiung, Taiwan. He received his M.S., and Ph.D. degrees in electrical engineering from National Chen-Kung University, Tainan, Taiwan, R.O.C., in 1994, and 2005, respectively. He is currently an Assistant Professor in the Department of Electrical Engineering, Kao Yuan University, Kaohsiung City, Taiwan. His research interests include power electronics, electric vehicles, battery, and rapid transit system.

En-Chih Chang was born in Kaohsiung, Taiwan, in 1975. He received the B.S. degree from Feng-Chia University, Taichung, Taiwan, R.O.C., in 1999, the M.S. degree from National Taiwan Ocean University, Keelung, Taiwan, R.O.C., in 2001, and the Ph.D. degree from National Cheng Kung University, Tainan, Taiwan, R.O.C., in 2008, all in electrical engineering. He joined the Department of Electrical Engineering, I-Shou University in 2009 as an Assistant Professor. His research interests include sliding mode control, intelligent control, grey theory, and their applications in power electronics systems.

Chin-Jui Liu was born in Kaohsiung, Taiwan, in 1991. He is presently in the M.S. program of the Department of Electrical Engineering, Kao Yuan University, Tainan, Taiwan, R.O.C., in 2010. His research interests include power system, power electronics systems.